Transfer RM8731 in Device I/O mode - commissioning

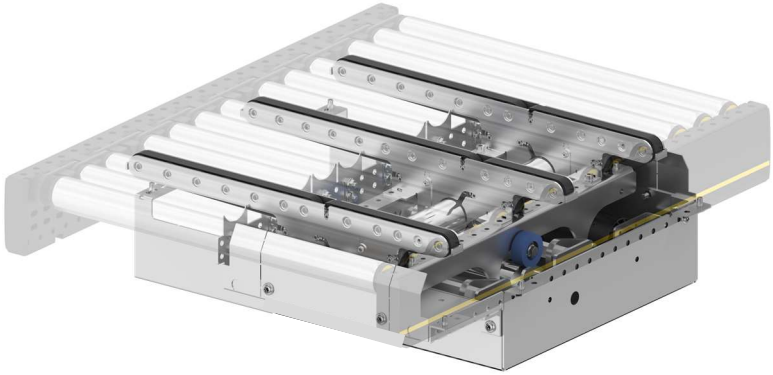

The Transfer RM8731 is a 24V driven belt transfer, so both possible movements, lift and belt, are driven by a 24V drive.
The transfer is controlled through the Interroll MultiControl, a bus slave for either Profinet, EthernetIP or Ethercat fieldbus systems.
Control signals and sensor signals are either available on the chosen bus, or on the digital Inputs and Outputs of the MultiControl. Please refer to the MultiControl manual for more information.

General Information:
The main power of the transfer DC motors and the MultiControl is supplied through the “Interface Box” right next to the MultiControl. The power supply connects to the Interface Box, which then splits power to both DC motors and the MultiControl.
If only one powerbus (PB1) is used, the connection of the Interface box to the power supply is sufficient.
If motors and sensors/control are split into two different powerbus lines (PB1 and PB2), The MultiControl must be additionally connected to PB2, the connection to PB1 from the Interface Box remains.

Power consumption:
There are two motors in the transfer, one for lifting the belts, one for driving the belts. Each motor needs 5,2A nominal power, 9A peak power (e.g. Puls QT20 power supply).
The voltage of the power supply must be between 24V and 26V.
Each motor connection includes a brake chopper inside the Interface Box, which reduces peak voltage (in brake mode) to a normal level.
If two powerbus lines are used, the brake chopper gets active in PB1 if the voltage exceeds 30V and switches off if the voltage drops again under the value of 28V.
If only PB1 is used, typically the MultiControl controls the voltage peaks internally and the transfer brake chopper is inactive.

The Transfer RM8731 is prewired. Cables connect the MultiControl to the Interface Box (signal and power). The motors plug directly to the Interface Box with M12 connectors. The main power is connected to the central M12 connector, which is scope of supply. You can see the wiring in the following pictures:

Sensors 2-4 and I/Os 1-4 are free to use. I/Os 1-4 might be occupied for digital interfaces.

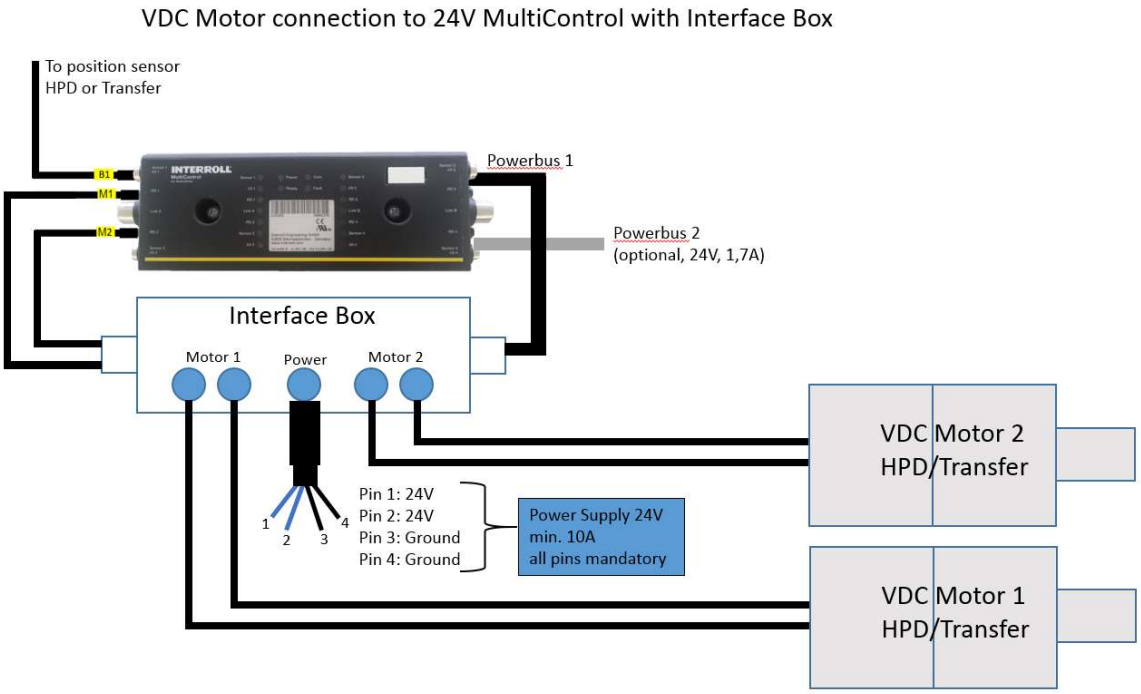

The connection to the power supply is a 4-pin-plug. The connection is as follows:

- Pin 1: +24V
- Pin 2: +24V
- Pin 3: 0V
- Pin 4: 0V

It is mandatory to connect all pins as described due to power consumption!

Configuration information slave mode (remote I/O):

The MultiControl offers using the Transfer as a fully PLC controlled device.
All functions have to be realized by the PLC. The MultiControl is a bus slave device.

The Interface box is the interface between MultiControl and the two motors in the transfer.

Motor	Function		Sensors	
Motor 1	Lift		Sensor 1	Lift
Motor 2	Belt		Other	Optional

The lift movement is realized by eccentrics always turning in one direction. The position is detected by a switch cam.
The motor must be stopped at the rising and falling edge of the sensor to realize lower and upper position.
When sensor 1 reaches the high signal (1), the transfer is in low position. Respectively it is in upper position when sensor 1 reached the low signal (0).

Control Signals:

Motor 1 is controlled by the Output-byte “Motor-Speed 1”
With values of 30 - 100 = the motor will turn in one direction up and down, always with the same speed (max. speed).

Motor 2 is controlled by the Output-byte “Motor-Speed 2”:
Value 0 – 100; positive values is forward and negative is backward movement.

MultiControl Program: Device I/O Mode

The parameters of the slave mode program have to be set as shown in the following diagram:

You will find further detailed information about controlling the drives via bus or digital I/O in the Manual MultiControl.